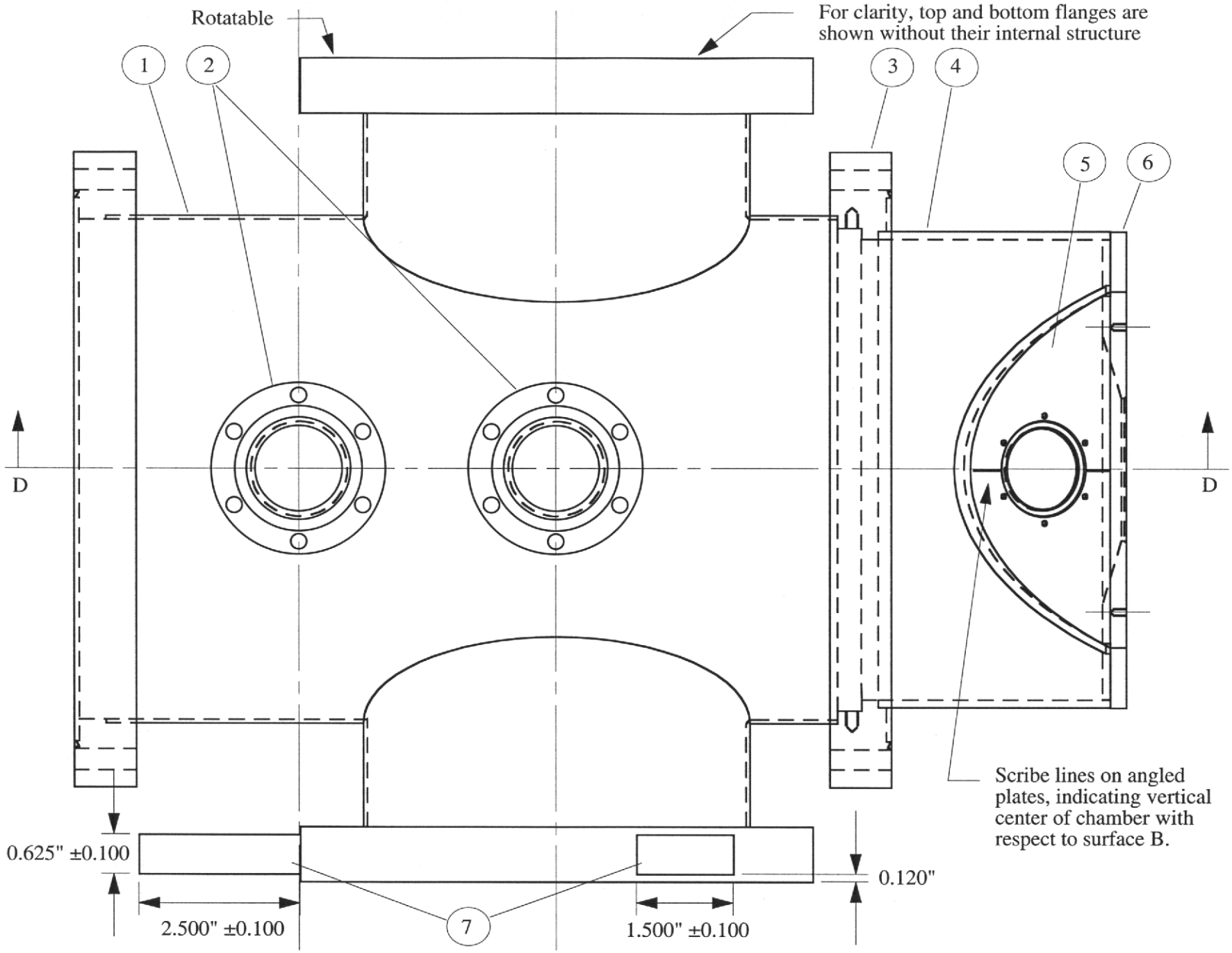
Rotatable
For clarity, top and bottom flanges are shown without their internal structure
1
2
3
4
5
6
7
D
D
Scribe lines on angled plates, indicating vertical center of chamber with respect to surface B.
0.625" ±0.100
0.120"
2.500" ±0.100
1.500" ±0.100